Edith Cowan University
Research Online

ECU Publications Pre. 2011

2009

An Opto-VLSI-based reconfigurable optical add-drop multiplexer employing an off-axis 4-f imaging system

Mingya Shen
Edith Cowan University

Feng Xiao
Edith Cowan University

Selam Ahderom

Kamal Alameh
Edith Cowan University

This paper was published in Optics Express and is made available as an electronic reprint with the permission of OSA. The paper can be found at the following URL on the OSA website: http://www.opticsinfobase.org/oe/abstract.cfm?URI=oe-17-16-14015. Systematic or multiple reproduction or distribution to multiple locations via electronic or other means is prohibited and is subject to penalties under law.
This Journal Article is posted at Research Online.
http://ro.ecu.edu.au/ecuworks/634

An Opto-VLSI-based reconfigurable optical add-drop multiplexer employing an off-axis 4-f imaging system

Mingya Shen, Feng Xiao, Selam Ahderom, and Kamal Alameh

Centre of Excellence for MicroPhotonic Systems, Edith Cowan University, Joondalup, WA, 6027, Australia
m.shen@ecu.edu.au, f.xiao@ecu.edu.au, selam.ahderom@gmail.com, k.alameh@ecu.edu.au

Abstract: A novel reconfigurable optical add-drop multiplexer (ROADM) structure is proposed and demonstrated experimentally. The ROADM structure employs two arrayed waveguide gratings (AWGs), an array of optical fiber pairs, an array of 4-f imaging microlenses that are offset in relation to the axis of symmetry of the fiber pairs, and a reconfigurable Opto-VLSI processor that switches various wavelength channels between the fiber pairs to achieve add or drop multiplexing. Experimental results are shown, which demonstrate the principle of add/drop multiplexing with crosstalk of less than -27dB and insertion loss of less than 8dB over the C-band for drop and through operation modes.

©2009 Optical Society of America

OCIS codes: (060.6718) Switching, circuit.

References and links

1. P. J. Winzer, G. Raybon, H. Song, A. Adamiecki, S. Corteselli, A. H. Gnauck, D. A. Fishman, C. R. Doerr, S. Chandrasekhar, L. L. Buhl, T. J. Xia, G. Wellbrock, W. Lee, B. Basch, T. Kawanishi, K. Higuma, and Y. Painchaud, "100-Gb/s DQPSK transmission: from laboratory experiments to field trials," J. Lightwave Technol. **26**(20), 3388-3402 (2008).
2. R. S. Bernhey, M. Kanaan, "ROADM deployment, challenges, and applications," Proc. OFC/NFOEC, 1-3 (2007).
3. M. Muha, B. Chiang, and R. Schleicher, "MEMS based channelized ROADM platform," Proc. OFC/NFOEC, 1-3 (2008).
4. L. Eldada, J. Fujita, A. Radojevic, T. Izuhara, R. Gerhardt, J. Shi, D. Pant, F. Wang, and A. Malek, "40-channel ultra-low-power compact PLC-based ROADM subsystem," Proc. OFC/NFOEC, NThC4, (2008).
5. B. Fracasso, J. L. de Bougrenet de la Tocnaye, M. Razzak, and C. Uche, "Design and performance of a versatile holographic liquid-crystal wavelength-selective optical switch," J. Lightwave Technol. **21**(10), 2405-2411 (2003).
6. G. Baxter, S. Frisken, D. Abakoumov, H. Zhu, I. Clark, A. Bartos and S. Poole, "Highly programmable wavelength selective switch based on liquid crystal on silicon switching elements," Proc. OFC/NFOEC, OTuF2, (2006).
7. F. Xiao, B. Juswardy, K. Alameh, and Y. T. Lee, "Novel broadband reconfigurable optical add-drop multiplexer employing custom fiber arrays and Opto-VLSI processors," Optics Express, **16**(16), 11703-11708 (2008).
8. J. Stockley and S. Serati, "Advances in liquid crystal beam steering," Boulder Nonlinear Systems, www.bnonliner.com, (2004).
9. K. M. Johnson, D. J. McKnight, and I. Underwood, "Smart spatial light modulators using liquid crystals on silicon," IEEE J. Quantum Electron, **29**(2), 699-714 (1993).
10. J. W. Goodman and A. M. Silvestri, "Some effects of Fourier-domain phase quantization," IBM J. Rev. Develop. **14**(9), 478-484 (1970).
11. M. A. F. Roelens, S. Frisken, J. A. Bolger, D. Abakoumov, G. Baxter, S. Poole, and B. J. Eggleton, "Dispersion trimming in a reconfigurable wavelength selective switch," J. of Lightwave Technol. **26**(1), 73-78 (2008).

1. Introduction

Reconfigurable optical add-drop multiplexers (ROADMs) are key devices in dynamic wavelength-division multiplexing (WDM) optical communication networks. A ROADM

#109638 - $15.00 USD Received 2 Apr 2009; revised 10 Jul 2009; accepted 13 Jul 2009; published 29 Jul 2009

enables individual or multiple wavelengths carrying data channels to be added and/or dropped from a transport fiber without the need to convert the signals in all of the WDM channels to electronic signals and again back to optical signals. The main advantages of using a ROADM in optical networks are the ability to dynamically allocate the available network bandwidth to individual users without affecting the traffic, and to equalize the power levels of the different wavelength channels processed through the ROADM [1], [2]. ROADM structures based on micro-electro-mechanical systems (MEMS) have been reported [3], where small mirrors are deformed or reoriented using electrostatic forces to steer optical beams and couple them into different output fiber ports. Planar lightwave circuits (PLCs) have also been used for ROADM structures [4]. The use of Opto-VLSI processors for realizing add/drop multiplexing has attracted research attention in recent years. The Opto-VLSI processor is based on the mature motionless liquid crystal on silicon technology and is particularly advantageous because it enables add/drop multiplexing of a large number of wavelength channels through computer-generated phase holograms [5], [6].

A ROADM structure based on the use of an Opto-VLSI processor and a custom-made angled fiber-pair array has recently been demonstrated [7]. In this paper, a new ROADM structure is proposed, where a commercially-available array of parallel optical fiber pairs is employed, in conjunction with an Opto-VLSI processor and an array of 4-f imaging microlenses that are offset in relation to the axis of symmetry of the parallel fiber pairs. By partitioning the Opto-VLSI processor into pixel blocks and driving each pixel block with a "drop" or a "thru (i.e. through)" steering phase hologram, optical switching between each optical fiber pair can be realized, leading to optical add/drop multiplexing. The proposed ROADM structure has a large bandwidth covering the C-band wavelength signals and moderate insertion loss and crosstalk and can be constructed by integrating off-the-shelf optical components.

2. Opto-VLSI-based ROADM – structure and principle

An Opto-VLSI processor consists of Very-Large-Scale-Integrated (VLSI) circuits that drive an array of liquid crystal (LC) cells [8]. It can generate multi-phase holographic blazed gratings capable of steering or shaping optical beams, as illustrated in Fig. 1. Each pixel of the Opto-VLSI processor is independently driven by a discrete voltage applied between the aluminum mirror electrode across the LC cells and a transparent Indium-Tin Oxide (ITO) layer as the second electrode. A quarter-wave-plate (QWP) layer between the LC and the aluminum mirror is usually used to accomplish polarization-insensitive operation [9].

An Opto-VLSI processor is electronically controlled, software configurable and has the capability of controlling multiple optical beams simultaneously with no mechanical moving parts. For an optical beam striking an Opto-VLSI processor with a small incidence angle, the x-direction θ_x or the y-direction θ_y of the 1st-order diffraction beam is determined by the linearized grating equation [10]:

$$\theta_{x/y} = \frac{\lambda}{p_{x/y}} = \frac{\lambda}{(s_{x/y})(N_{x/y})} \tag{1}$$

where $p_{x/y}$ is grating period in the x-direction or the y-direction, $s_{x/y}$ is the size of square/rectangular liquid crystal pixels and $N_{x/y}$ is the number of the pixels in a period of the grating. The digitized phase levels, $\{\varphi_n\}$, and steering efficiency $\eta(M)$ of the grating can be expressed as:

$$\varphi_n = n\frac{2\pi}{M}, \quad n = 1,\ldots,M \tag{2}$$

and

#109638 - $15.00 USD Received 2 Apr 2009; revised 10 Jul 2009; accepted 13 Jul 2009; published 29 Jul 2009
(C) 2009 OSA

$$\eta(M) = \left[\frac{\sin(\pi / M)}{(\pi / M)} \right]^2 \tag{3}$$

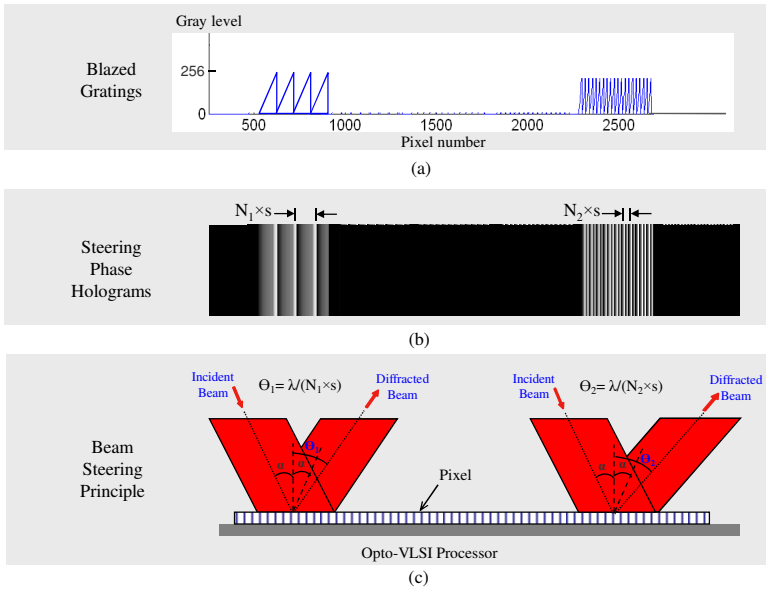

Fig. 1. (a) Gray level versus pixel number of different blazed gratings; (b) Corresponding steering phase holograms; (c) Principle of beam steering using an Opto-VLSI processor. The steering angle is inversely proportional to the blazed grating period.

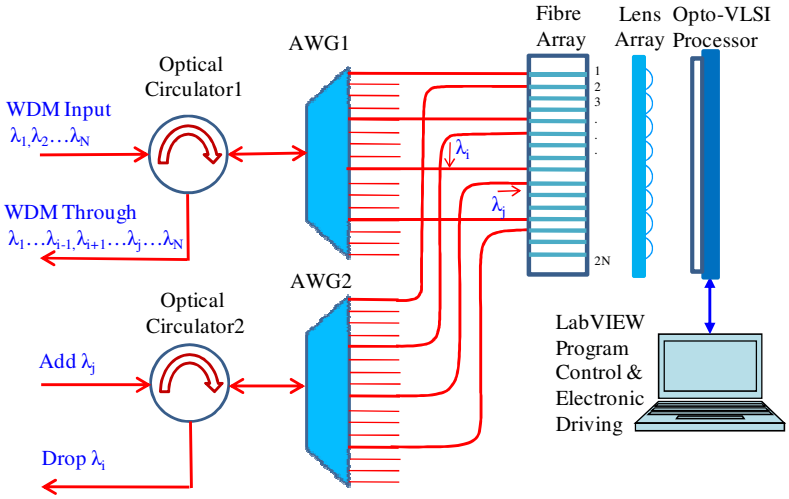

Fig. 2. The Opto-VLSI based ROADM structure using two AWGs, arrayed fiber pairs and a lens array realizing any reconfigurable add-drop and through operations of wavelength signals.

where M is the number of discrete phase levels. It can be seen from Eq. (1) that a diffracted beam can be steered to a desired direction $\theta_{x/y}$ by selecting $p_{x/y}$ parameters for a certain wavelength while the beam intensity (or steering efficiency) is dependent on the number of discrete phase levels.

#109638 - $15.00 USD Received 2 Apr 2009; revised 10 Jul 2009; accepted 13 Jul 2009; published 29 Jul 2009
(C) 2009 OSA

Figure 2 shows the proposed Opto-VLSI-based reconfigurable ROADM structure employing an off-axis 4-f imaging system for add/drop multiplexing. The input WDM signals are routed, through a circulator, to an N-channel arrayed waveguide grating (AWG1) demultiplexer whose output fiber ports are assigned to wavelength channels (λ_1 to λ_N). The AWG1 ports are connected to the odd-numbered ports of a fiber array consisting of N fiber pairs. Each pair comprises an upper fiber (connected to AWG1) and a lower fiber (connected to AWG2). A lens array is placed at a distance equals to the focal length *f* of the lens elements from the fiber array. Each lens is used to collimate the divergent beam from its associated upper optical fiber. The spacing between the upper fiber and the optical axis of the corresponding lens is around a quarter of the fiber array spacing. The collimated beams (wavelength channels) are projected on the active window of the Opto-VLSI processor, which is placed at a distance *f* from the lens array.

Figure 3 illustrates the principle of add/drop multiplexing for a wavelength channel in the ROADM structure shown in Fig. 2. When a blank phase hologram is uploaded onto a pixel block associated to a fiber pair, the optical beam emerging from an upper optical fiber is collimated by the 4-f imaging lens associated to the fiber pair, reflected back by the Opto-VLSI processor (0th-order diffraction), and then focused by the same lens onto a spot between the upper and lower optical fibers so that negligible optical power (crosstalk) is coupled into both upper and lower fibers, as illustrated in Fig. 3(a). By applying an appropriate steering hologram into the Opto-VLSI processor, a collimated beam can be steered and coupled to

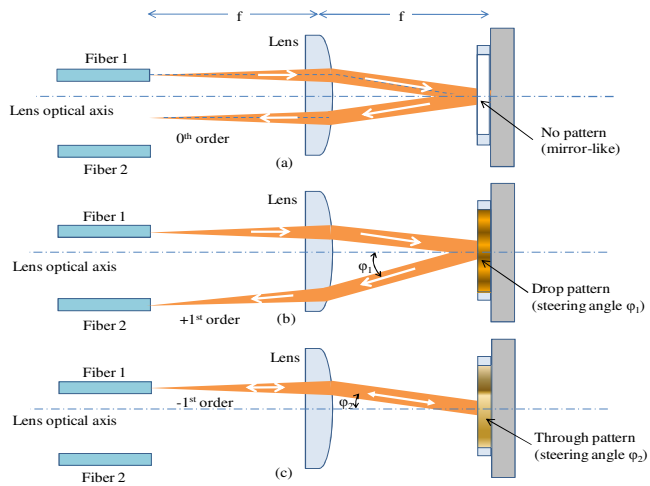

Fig. 3. Illustration of the principle of drop and thru operations. The upper and lower fibers are offset from the optical axis of their associated imaging lens for achieving optical switching between the fibers with minimum crosstalk. (a) Without a phase hologram, the collimated optical beam reflects back and focuses on a spot between the two fibers; (b) With a drop hologram on, a $+1^{st}$ order diffracted beam is focused on and coupled into the fiber 2; (c) With a thru hologram on, a -1st order diffracted beam is focused on and coupled back into the fiber 1.

either the lower fiber ($+1^{st}$-order diffraction for drop operation) or back to the upper fiber (-1st-order diffraction for thru operation) as shown in Fig. 3(b) and Fig. 3(c), respectively. Dropped wavelengths are multiplexed via the second arrayed waveguide grating (AWG2) and routed to the drop port through a circulator, while the added wavelengths that are launched at the add-port propagate along different AWG2 paths and in opposite directions to the dropped wavelengths, where they are steered by the Opto-VLSI processor, coupled to the upper fibers and multiplexed via AWG1 to reach the thru port.

#109638 - $15.00 USD Received 2 Apr 2009; revised 10 Jul 2009; accepted 13 Jul 2009; published 29 Jul 2009
(C) 2009 OSA

3. Experiment and results

In order to demonstrate the add, drop and thru performance and the feasibility of the proposed ROADM structure, an experimental setup shown in Fig. 4 was arranged. A 1-D 256-phase 4,096-pixel Opto-VLSI processor was used. Each pixel has an area of 6mm×1μm with a dead space between adjacent pixels of 0.8μm. An off-the-shelf 16-port fiber array of fiber spacing 250μm was used and aligned to a 4-element lens array of focal length 2.42mm and spacing 1mm. The Opto-VLSI processor was also aligned to and placed at 2.42mm from the lens array in order to form a 4-f imaging system. To demonstrate the concept of drop and thru operations for the ROADM structure, four optimized phase holograms were synthesised to steer two wavelength channels λ_1=1547.5nm and λ_2=1530.3nm generated by two tunable laser sources and launched into port 2 and port 14 of the fiber array, respectively. The optical beam diverging from fiber port 2 was collimated at around 0.5 mm diameter and steered by the synthesized phase holograms either to fiber port 2 for thru operation or to fiber port 3 for drop operation. Similarly, the other wavelength channel λ_2=1530.3nm was simultaneously launched into fiber port 14, and through different optimized phase holograms. It was then either dropped to fiber port 15 or sent back to fiber port 14 for thru operation. Note that both input collimated optical beams (at λ_1 and λ_2) hit the Opto-VLSI processor at an angle of incidence of around 1.5^o. In the experimental setup shown in Fig. 4, the two optical circulators were used to route the thru signals, and the two 3-dB couplers were used to combine the two wavelength channels (λ_1 and λ_2) so they can simultaneously be monitored by a single optical spectrum analyzer.

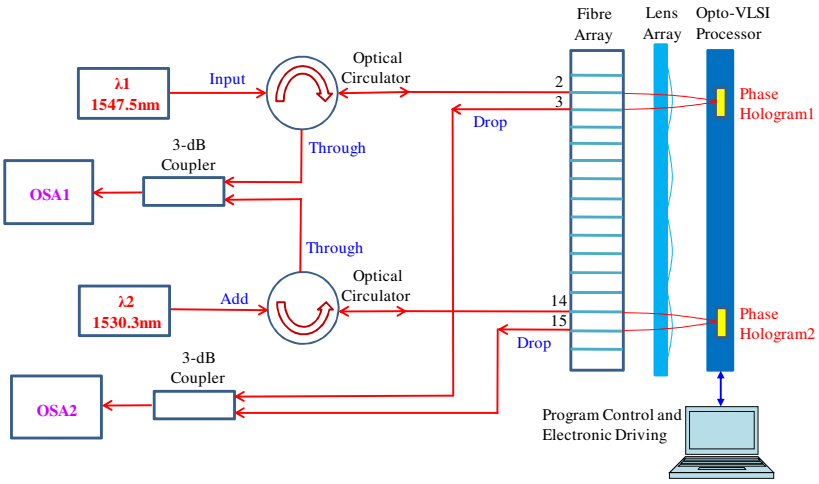

Fig. 4. Experimental setup demonstrating the add/drop and thru operations of the Opto-VLSI-based ROADM structure.

Figure 5 shows the optimized "drop" and "thru" phase holograms designed for the two channels λ_1 and λ_2. All "drop" and "thru" holograms had 512 pixels. This relatively large hologram size was necessary to minimize the insertion loss and crosstalk levels. This hologram size was determined by the incident Gaussian beam size of 0.53mm (295 pixels) and extra 217 pixels so that the fraction of the optical power falling outside the hologram coupled into the unintended fiber ports is negligible. A LabVIEW program was especially written to control the Opto-VLSI processor so that "drop" and "thru" operations were carried out by software only.

#109638 - $15.00 USD Received 2 Apr 2009; revised 10 Jul 2009; accepted 13 Jul 2009; published 29 Jul 2009
(C) 2009 OSA

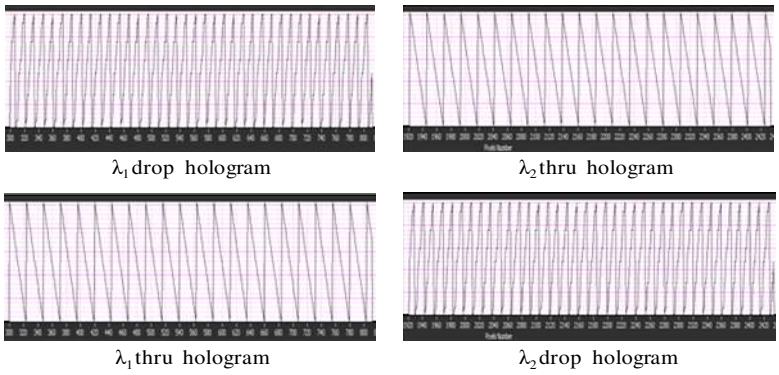

Fig. 5. Optimized "drop" and "thru" phase holograms for channels λ_1 and λ_2. The horizontal axis is in units of pixels and the vertical axis is in gray level from 0 to 256.

The measured optical intensities at the four output ports of the ROADM system for drop and thru scenarios are shown in Fig. 6 (a)-(d). Figs 6 (a) and (b) show the optical spectra of the signals received at the drop and thru ports when λ_1 is passed thru while λ_2 is dropped. For this scenario, the crosstalk, defined as the ratio of the thru (or dropped) power at λ to the

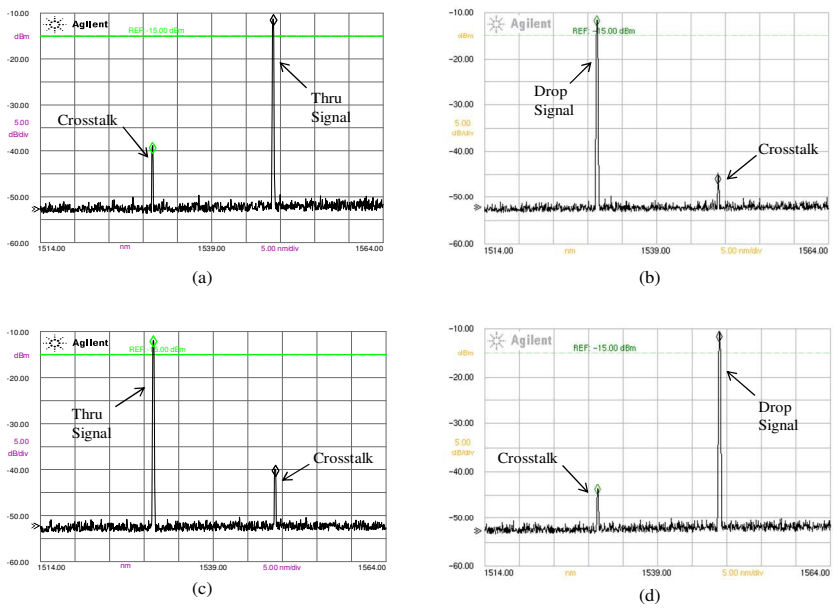

Fig. 6. Experimental results showing the drop and thru operations for λ_1 and λ_2 channels. Measured optical spectra on (a) OSA1 and (b) OSA2, when λ_1 is passed thru and λ_2 is dropped. Measured optical spectra on (c) OSA1 and (d) OSA2, when λ_1 is dropped and λ_2 is passed thru.

power at λ received at the drop (or thru port) , is -34.7dB measured at λ_1 in fiber port 3 and -27.5dB measured at λ_2 in fiber port 14. Figure 6(c) and (d) show the optical spectra of the signals received at the drop and thru ports when λ_1 is dropped while λ_2 is passed thru. For this scenario, the crosstalk is -28.6dB measured at λ_1 in fiber 2 and -31.8dB measured at λ_2 in fiber 15. Table 1 summarizes the measured signal intensities and crosstalk for the different drop and thru scenarios.

The input optical power levels for both signals λ_1 and λ_2 were +1dBm, the 3-dB coupler at the thru and the drop ports introduced around 3.3dB loss, and the circulator loss was 1.6dB. Therefore, with a measured output signal power of around -11.9dB the total insertion loss of the ROADM structure was therefore around 8dB. This loss was mainly contributed by the

#109638 - $15.00 USD Received 2 Apr 2009; revised 10 Jul 2009; accepted 13 Jul 2009; published 29 Jul 2009
(C) 2009 OSA

fiber-to-fiber beam coupling loss, the Opto-VLSI loss and polarization dependent loss of less than 0.6dB.

Table 1. Intensity values of measured drop, through signals and crosstalk for the two wavelength signals.

Wavelength(nm)	$\lambda_1 = 1547.5$		$\lambda_2 = 1530.3$	
Operation	Thru	Drop	Thru	Drop
Signal Intensity(dBm)	-11.4	-11.5	-11.9	-11.7
Crosstalk(dB)	-34.7 (in fiber3)	-28.6 (in fiber2)	-31.8 (in fiber15)	-27.5(in fiber14)

To demonstrate the broadband capability of the proposed ROADM structure, another experiment was carried out for measuring the signal and crosstalk power levels for drop and thru operations of the two wavelength channels over a wavelength range. The input wavelengths at fiber port 2 and fiber port 14 were tuned over a wavelength range of 14nm without changing their corresponding phase holograms. Both output optical intensities and crosstalk were measured by the two OSAs as described in Fig. 4. Fig. 7 shows the measured

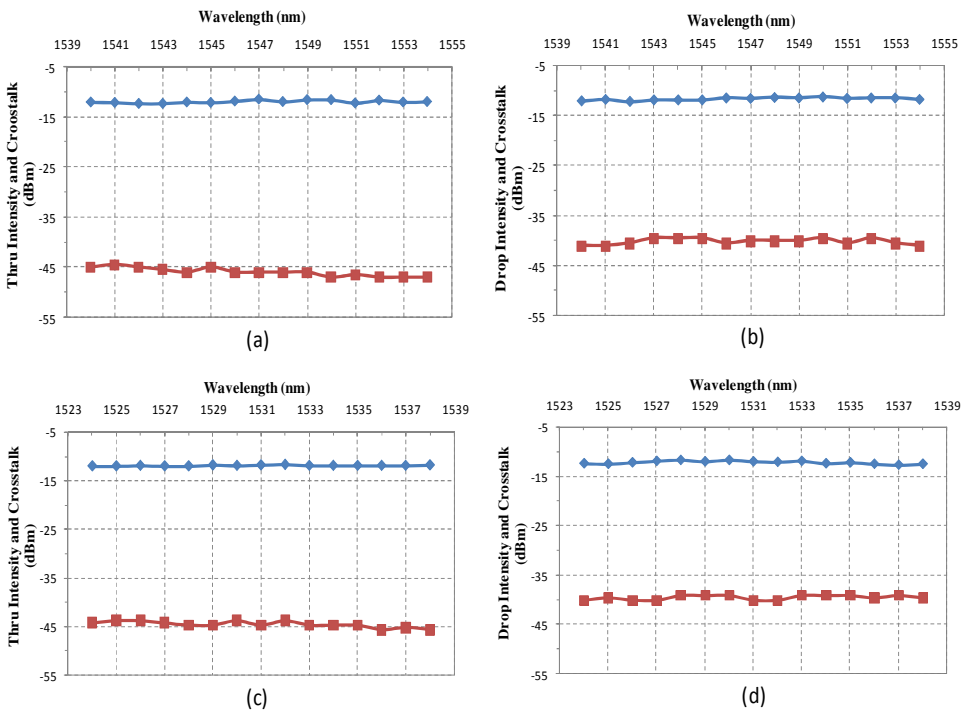

Fig. 7. Measured intensities of the drop and thru signals (top curves) and crosstalk (bottom curves) around λ_1 and λ_2 wavebands. (a) and (b) λ_1 channel signals are passed thru and dropped, respectively; (c) and (d) λ_2 channel signals are passed thru and dropped, respectively.

intensities of the drop and thru signals as well as the crosstalk, versus wavelength. It can be seen from Fig. 7 that the fluctuations in drop/thru signal intensities is less than 1dB and the crosstalk is always less than -27dB over a wavelength range of 14nm. This demonstrates the wideband capability of the ROADM structure. Note that, the additional loss due to lateral misalignment of the microlenses with respect to the Opto-VLSI processor and the fiber array can be compensated for by reconfiguring the holograms uploaded onto the Opto-VLSI

#109638 - $15.00 USD Received 2 Apr 2009; revised 10 Jul 2009; accepted 13 Jul 2009; published 29 Jul 2009
(C) 2009 OSA

processor. However, the longitudinal misalignment of the microlens array, when the fiber array and the Opto-VLSI processor are fixed, results in a loss penalty of 0.01dB/μm.

Note that, the 1-dimentional (1-D) ROADM structure could easily be extended to a 2-dimentional (2-D) structure by using a 2-D large-area Opto-VLSI processor [11] in conjunction with a 2-D fiber array and a 2-D microlens array. This dramatically increases the number of WDM channels that can be added and dropped, and significantly reduces the per-channel cost of manufacturing the proposed ROADM structure.

4. Conclusion

A novel Opto-VLSI reconfigurable optical add-drop multiplexer structure based on the use of arrayed waveguide gratings and an off-axis 4-f imaging system has been proposed and demonstrated experimentally. The Opto-VLSI processor incorporated with the 4-f imaging system has enabled the switching of various wavelength channels between fiber pairs thus realizing add/drop multiplexing with low crosstalk. Experimental results have demonstrated the principle of add/drop multiplexing with crosstalk of less than -27dB and insertion loss of less than 8dB over the C-band wavelength signals for drop and thru operations. The broadband capability of the proposed ROADM structure has been investigated experimentally for individual wavelength channel; it shows less than 1dB fluctuations in output signal levels for drop and thru operations, and less than -27dB crosstalk levels over a wavelength range of 14nm.

#109638 - $15.00 USD Received 2 Apr 2009; revised 10 Jul 2009; accepted 13 Jul 2009; published 29 Jul 2009
(C) 2009 OSA