Edith Cowan University
Research Online

ECU Publications Pre. 2011

2008

Opto-VLSI-Based Reconfigurable Microwave Photonic Transversal Filter With Positive And Negative Coefficients

Feng Xiao
Edith Cowan University

Budi Juswardy
Edith Cowan University

Kamal Alameh
Edith Cowan University

This article was originally published as: Xiao, F. , Juswardy, B. , & Alameh, K. (2008). Opto-VLSI-Based Reconfigurable Microwave Photonic Transversal Filter With Positive And Negative Coefficients. International Topical Meeting on Microwave Photonics, 2008. Jointly held with the 2008 Asia-Pacific Microwave Photonics Conference. MWP/APMP. (pp. 251-254). Gold Coast, Australia. IEEE. Original article available here
This Conference Proceeding is posted at Research Online.
http://ro.ecu.edu.au/ecuworks/1115

Opto-VLSI-based Reconfigurable Microwave Photonic Transversal Filter with Positive and Negative Coefficients

Feng Xiao, Budi Juswardy, and Kamal Alameh
WA Centre of Excellence for MicroPhotonic Systems, Electron Science Research Institute,
Edith Cowan University, Joondalup, WA, 6027, Australia
Email: f.xiao@ecu.edu.au

Abstract: A novel reconfigurable microwave photonic filter structure with positive and negative coefficients is proposed and demonstrated. The filter structure comprises two arrayed waveguide gratings, a custom-made fiber array, high-dispersion fibres, and a reconfigurable Opto-VLSI processor. Positive and negative filter weights can flexibly be synthesised to realise arbitrary transfer functions. Experimental results are presented, which demonstrate the principle of the proposed filter structure.

Index Terms: Microwave Photonics, Photonic RF filters, Optical Signal Processing.

1. Introduction

Photonic processing of microwave and millimetre-wave signals has attracted considerable attention due to their ultra-wide bandwidth, immunity to electromagnetic interference, flexibility, and light weight. These advantages bring a wide range of potential applications that require high selectivity or resolution, wide tunability, and fast reconfigurability [1].

In recent years, numerous structures of microwave photonic transversal filters with reconfiguration and tuning capabilities have been proposed and demonstrated [1-3]. Among these structures reconfiguration of the filter transfer function is achieved by adjusting the tap weights through optical attenuation via MEMS switches [2], variable optical attenuators (VOAs) [4], and Fibre Bragg Gratings (FBG) [5]. MEMS switches suffer mechanical reliability issues such as stability and fatigue. The use of VOAs for each spectral taps increases the overall cost, and FBGs are limited in terms of flexibility and tunability. On the other hand, negative coefficients are also necessary to generate a wide range of filter transfer functions. The differential detection technique, which is based on balanced photodetection, allows the implementation of positive and negative coefficients simultaneously. However, achieving high-resolution reconfigurable microwave photonic transversal filters is still the subject of extensive research [6].

In this paper we propose and demonstrate the principle of a novel microwave photonic transversal filter structure that employs an Opto-VLSI processor, a broadband optical source, a pair of Arrayed Waveguide Gratings (AWG), and balanced photodetectors to realise high-resolution reconfigurable microwave photonic transversal filters with positive and negative coefficients. The filter structure is reconfigurable and tunable and can synthesise arbitrarily transfer functions.

2. Opto-VLSI processor

An Opto-VLSI processor consists of an array of electro-optic cells independently addressed by a Very-Large-Scale-Integrated (VLSI) circuit to generate a reconfigurable, reflective digital holographic diffraction grating capable of steering and/or multicasting an optical beam [7]. It comprises a silicon substrate, evaporated aluminium, a quarter-wave plate (QWP), liquid crystal (LC), Indium-Tin Oxide (ITO) and a glass. ITO is used as the transparent electrode, and evaporated aluminium as the reflective electrode. The quarter-wave plate (QWP) layer between the liquid crystal and the VLSI backplane is responsible for polarization insensitivity, and polarization dependent loss for optical beam steering is as low as 0.5 dB [8]. The ITO layer is generally grounded and a voltage is applied at the reflective electrode by the VLSI circuit below the LC layer to generate digital phase holograms for optical beam control. Some specific memory elements that store a digital voltage value are assigned to each pixel. This device is electronically controlled, software configurable, polarization independent, and very reliable since beam steering/multicasting is achieved with no mechanically moving part. The deflection angle for the Opto-VLSI processor, α_m, is given by:

$$\alpha_m = \arcsin\left(\frac{m\lambda}{d}\right) \tag{1}$$

where m is the diffracted order (here only first order is considered), λ is the vacuum wavelength, and d is the grating period.

3. Filter Structure

The structure of the novel reconfigurable microwave photonic filter is shown in Fig. 1. A broadband light source of amplified spontaneous emission (ASE) is externally modulated by the RF signal through an electro-optic modulator (EOM). The modulated light is routed via a circulator into an N-channel arrayed waveguide grating (AWG 1) which slices the ASE into different RF-modulated wavebands, which are routed to a custom-made fiber array of N fibre pairs. Each fiber pair consists of an upper fiber (connected to an output port of AWG 1) and a lower fiber (connected to a corresponding port of AWG 2). The angle between the upper and lower fibers is θ. A lens array is used to convert the divergent beams from the upper optical fibers into collimated beams, which illuminate different pixel blocks on the Opto-VLSI active window that

is tilted an angle φ with respect to the lens array. When blank hologram is used, the collimated beam from an upper optical fiber is reflected off the Opto-VLSI processor and focused through the corresponding microlens onto an area between the ends of the upper and lower optical fiber pairs. By employing an appropriate hologram into the Opto-VLSI processor, the collimated beam is appropriately steered and coupled with arbitrary attenuation (or weight) to either the upper fiber (for positive weights) or to the lower port (for negative weights). Note that the angle θ, between an upper and lower fiber pair, is optimised to minimise the insertion loss and crosstalk that result from switching a collimated beams between the fiber pairs. The wavelengths from the lower ports are multiplexed via AWG 2 and delayed by a high dispersion fiber, while the remaining wavelengths, which are steered and coupled back into the upper fibers, are multiplexed by AWG 1 and reach another similar high dispersion fiber via the circulator. The two multiplexed WDM signals are detected by a pair of balanced photodiodes which generate delayed versions of the input RF signal with positive and negative weights that are controlled by the phase holograms uploaded onto the Opto-VLSI processor, thus realising an arbitrary transfer function. Note that, even though the optical intensity is always positive, positive and negative currents (or weights) can be achieved through balanced detection.

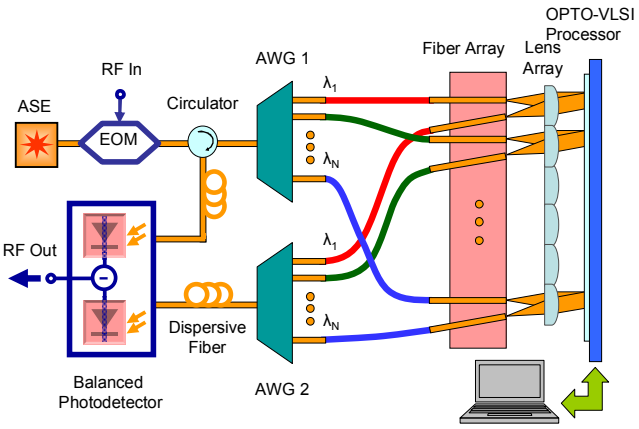

Fig. 1. Novel reconfigurable microwave photonic filter structure.

4. Simulation

The response of the filter structure shown in Fig. 1 can be expressed as

$$H(\omega) = \sum_{k=0}^{N-1} a_k e^{-j\cdot\omega\cdot k\cdot T} \qquad (2)$$

Here n is the number of the taps, a_k is the weight associated with the kth tap, which is proportional to the optical intensity of the kth waveband, λ_k, coupled into the upper or lower fiber ports.

A computer algorithm has been developed to optimise the tap weights, a_k, that synthesise a specific filter transfer function. and generate the appropriate steering phase holograms to be uploaded into the Opto-VLSI processor. Fig 2(a) and Fig. 2(b) show simulated 32-tap notch filter responses, where the notch is tuned from 3 GHz to 8.5 GHz (the normalised weights are shown in the insets). Fig. 2 (c) and Fig. 2(d) show examples of dual-notch and flat bandpass responses that can be synthesised by reconfiguring the Opto-VLSI processor of a 32-tap filter.

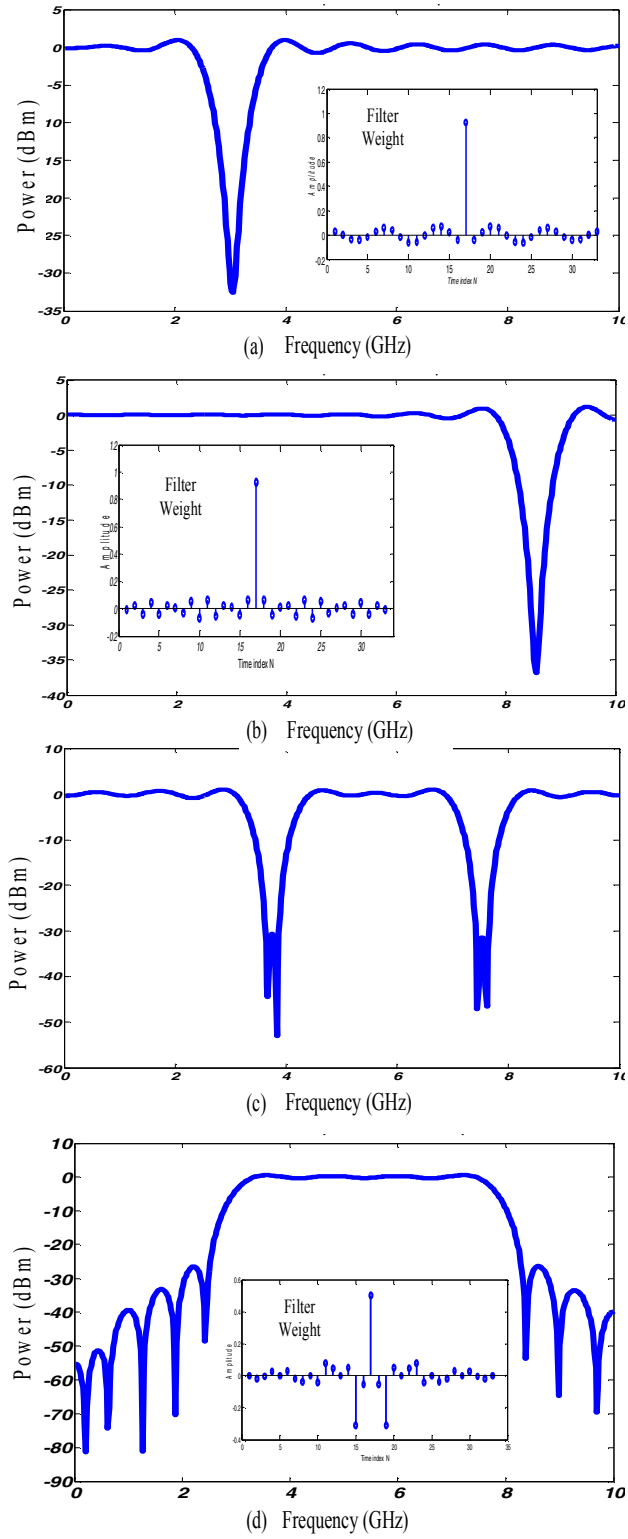

Fig. 2. Examples of filter responses that can be generated by a 32-tap filter structure. (a) and (b) tunable notch responses, (c) dual notch response, and (d) wide passband response.

5. Experiments and results

In order to demonstrate the principle of the reconfigurable microwave photonic filter structure, a costumed fiber array was fabricated with the angle between the upper and lower fiber pairs being 1.5°. Fig. 3 show the experimental setup used, where a tunable laser source of a tuning range from 1524 nm to 1576 nm was employed in conjunction with two optical spectral analyzers that monitored the positive-coefficient (upper) fiber port and the negative-coefficient (lower) port. A 2mm diameter lens with a focal length of 5 mm was used to collimate the light from the upper fiber at 1mm diameter, and the collimated beam was launched onto the active window of a 256-phase-level one-dimensional Opto-VLSI processor having 1×4096 pixels with 1 μm pixel size and 0.8 μm dead spacing between adjacent pixels. A Labview software was developed to generate the optimized digital holograms that steer the incident beam along desirable directions.

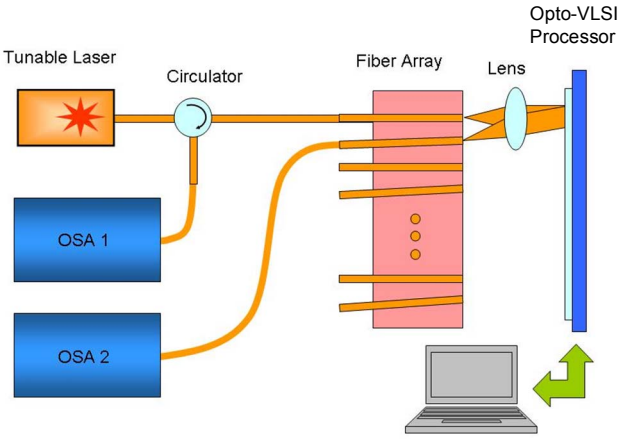

Fig. 3. Experimental setup demonstrating weight synthesis through beam steering and coupling into the upper and lower fiber ports using an Opto-VLSI processor. The fiber array is custom made and the angle between the upper and lower fiber pair is 1.5°.

When no phase hologram was applied, the Opto-VLSI processor acted like a mirror. Before the appropriate phase hologram was uploaded, the Opto-VLSI processor was slightly tilted so that the reflected collimated beam is focused onto an area between the upper and lower fibers (called 0th-order spot). In the experiment, the 0th-order direction has an angle of 0.61° with respect to the upper fiber, and 0.89° with respect to the lower fiber. Two phase holograms were generated and optimized to steer and couple the incident collimated beam to either the upper fiber (for positive weights) or the lower fiber (for negative weights). The laser power launched into the fiber array was +2 dBm. The maximum intensity coupled to the upper/lower fiber for the positive/negative tap (i.e., the full weight) was -2.9 dBm. Fig. 4(a) shows the maximum optical power coupled into the lower port versus wavelength using a fixed steering hologram. Fig. 4(b) shows the maximum optical power coupled into the upper fiber port versus wavelength using a fixed steering hologram. Also shown in Fig. 4(b) is the crosstalk (defined as the optical power coupled into the lower fiber port when the optical beam is steered into the upper fiber port) over the wavelength span. A crosstalk level below -40 dBm is displayed in Fig. 4(b), which results in negligible unwanted fluctuations in the filter's transfer function.

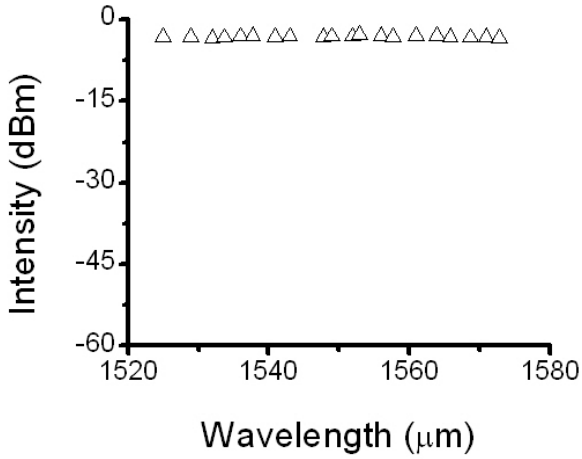

(a)

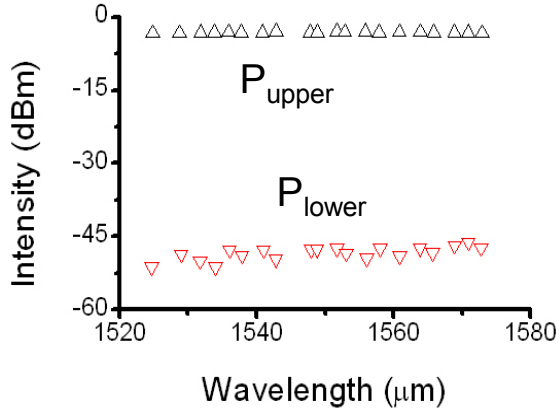

(b)

Fig. 4. Maximum optical power coupled into (a) lower port and (b) upper port, versus wavelength. Also shown in Fig. 4(b) is the crosstalk, ie. the power coupled into the lower port when the optical beam is steered into the upper port.

Note that the Opto-VLSI based reconfigurable microwave photonic filter structure has high flexibility in synthesising arbitrary positive and negative weights. This can be achieved by simply reconfiguring the individual steering phase holograms (uploaded onto the Opto-VLSI processor) that steer the wavebands and couple them into the appropriate fiber ports. Fig. 5 shows the optical power coupled into the lower fiber port (negative tap) versus the maximum voltage level (which corresponds to a maximum phase level of ψ_{max}) applied to generate a steering phase hologram. The latter is generally a blazed grating of pitch q pixels and a maximum phase level ψ_{max} as shown in the inset of Fig. 5, and its diffraction efficiency decreases as ψ_{max} reduces. It is obvious from Fig. 5 that arbitrary tap weights can be generated by simply adjusting the maximum voltage level applied to the Opto-VLSI processor.

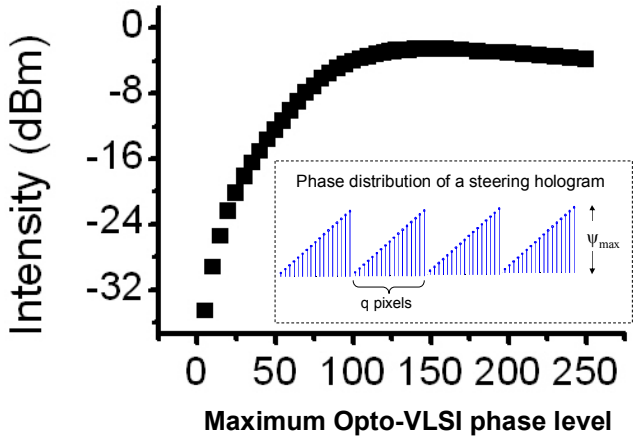

Fig. 5. Coupled optical intensity versus maximum phase level of the opto-VLSI processor. Phase level of 256 corresponds to 360° phase shift.

The optical coherence that results form the spectral overlapping between adjacent AWG channels was also experimentally investigated. A two-tap optical filter structure was implemented using two adjacent AWG ports driven by an ASE source and optical fiber delay lines, as shown in Fig. 6.

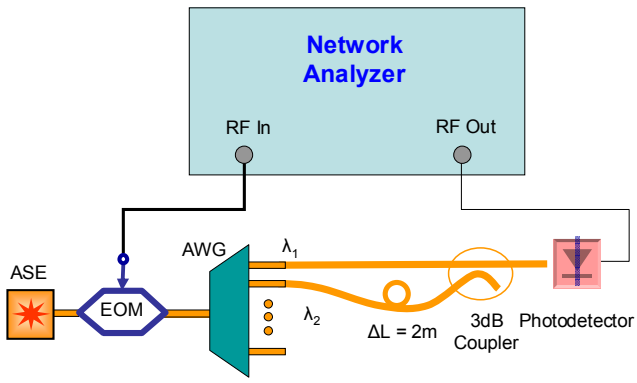

Fig. 6. Experimental setup for investigating the optical coherence between adjacent AWG channels.

The adjacent AWG wavebands were modulated by an input RF signal and one of the wavebands was delayed with respect to the other waveband by around two meters. The combined RF-modulated wavebands were detected by a broadband photodetector and the frequency response of the two-tap notch filter was measured by a network analyzer. Fig. 7 shows the measured two-tap filter response at different times (about half an hour time interval), confirming a stable (fluctuations-free) frequency response and demonstrating that the optical coherence due to spectral overlapping between adjacent AWG channels is negligible [9].

The above-described experiments demonstrate the principle of the proposed microwave photonic transversal filter structure. Finally, note that by employing a two-dimensional 20mm×20mm Opto-VLSI processor, a 256-tap can practically be realised using commercially available AWGs.

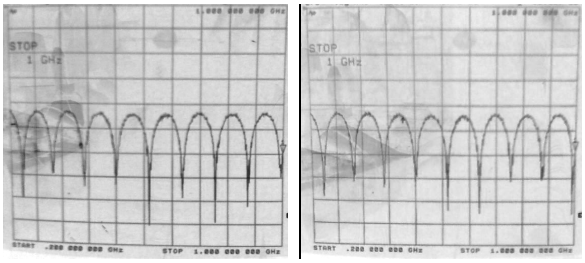

(a) (b)

Fig. 7. Two-tap filter responses at different times, demonstrating negligible optical coherence between adjacent AWG channels.

6. Conclusion

We have proposed and demonstrated the principle of a novel reconfigurable microwave photonic transversal filter structure employing arrayed waveguide gratings, a custom-made fiber array and an Opto-VLSI processor to synthesise positive and negative tap weights and thus arbitrary transfer functions. Simulation and experimental results have demonstrated that arbitrary tap weights can be generated using optimised steering phase holograms uploaded onto the Opto-VLSI processor, and that arbitrary transfer functions can be synthesised by optimising the positive and negative weights of the filter structure. The filter structure has applications in broadband signal processing.

References

[1] J. Capmany, B. Ortega, and D. Pastor, "A tutorial on microwave photonic filters," J. Lightw. Technol., vol. 24, no. 1, pp. 201–229, Jan. 2006.

[2] J. Capmany, J. Mora, B. Ortega, and D. Pastor, "Microwave photonic filters using low-cost sources featuring tunability, reconfigurability and negative coefficients," Opt. Express, vol. 13, pp. 1412–1417, 2005.

[3] V. Polo, B. Vidal, J. L. Corral, and J. Marti, "Novel tunable photonic microwave filter based on laser arrays and N×N AWG-based delay lines," IEEE Photon. Technol. Lett., vol. 15, No. 4, pp. 584–586, 2003.

[4] D. Pastor, B. Ortega, J. Capmany, S. Sales, A. Martinez, and P. Muñoz, "Optical microwave filter based on spectral slicing by use of arrayed waveguide gratings," Opt. Lett., Vol. 28, pp. 1802-1804, 2003.

[5] J. D. Taylor, L. R. Chen, and X. Gu, "Simple reconfigurable photonic microwave filter using an array waveguide grating and fiber Bragg gratings," IEEE Photonics Technology Letters, vol. 19, pp. 510-512, 2007.

[6] J. Capmany, B. Ortega, D. Pastor, and S. Sales, "Discrete-time optical processing of microwave signals," Journal of Light Technology, Vol. 23, pp. 702-722, 2005.

[7] Z. Wang, R. Zheng, K. Alameh, R. Robertson, U. Muller, and L. Bloom. "Opto-VLSI based dynamic optical splitter", IEE Electronics Letters, vol. 40, No. 22, pp. 1445-1446, 2004.

[8] I. G. Manolis, T. D. Wilkinson, M. M. Redmond, and W. A. Crossland, "Reconfigurable multilevel phase holograms for optical switches," IEEE Photon. Technol. Lett. 14, 801–803 (2002).

[9] Zheng, R., Alameh, K., and Wang, Z., "A Microphotonic Transversal RF Signal processor with No Laser-Coherence Noise". *Microwave and optical Technol. Lett.,* Vol. 45, No. 6, pp. 540-545, 2005.